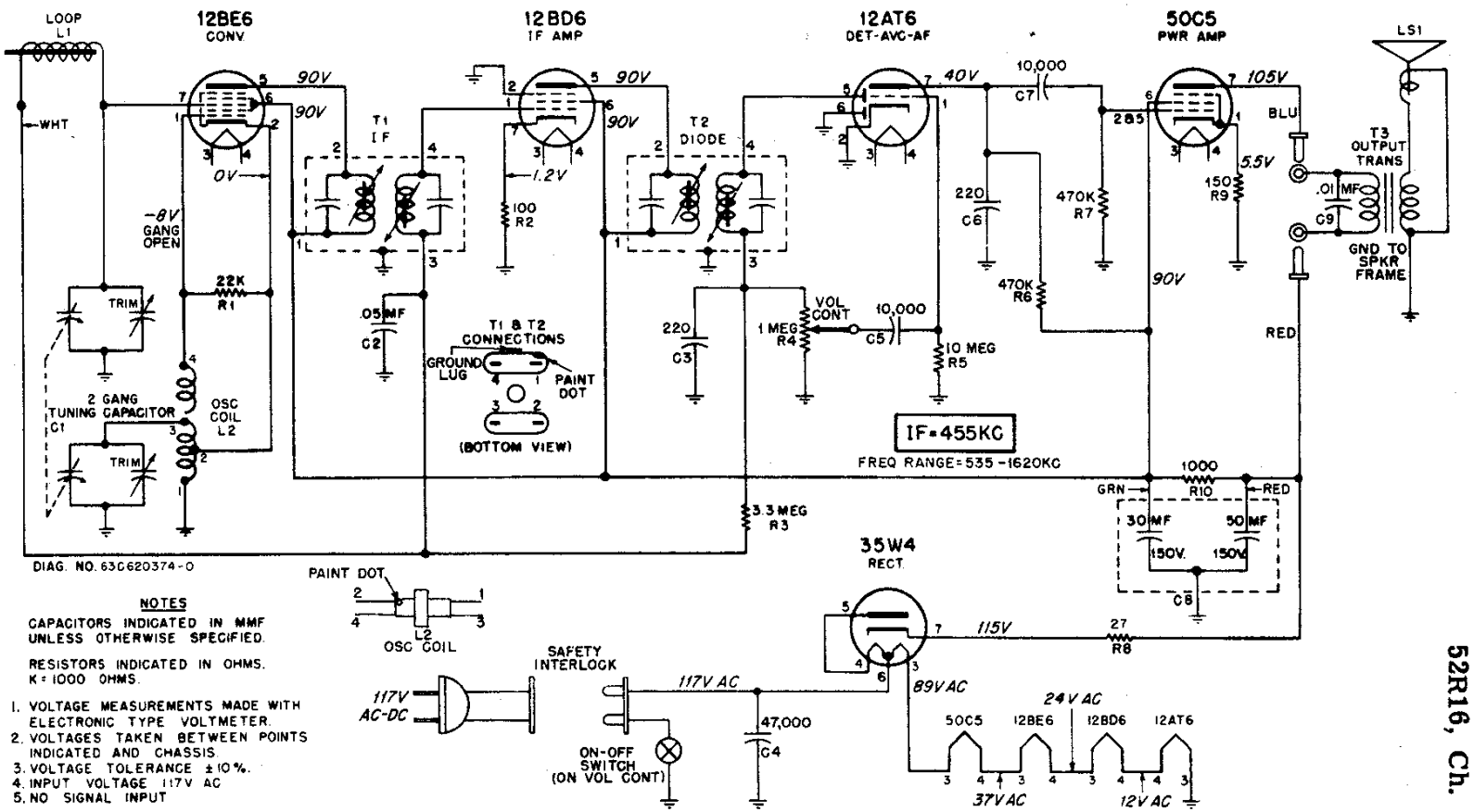


NOTES

CAPACITORS INDICATED IN MMF UNLESS OTHERWISE SPECIFIED.

RESISTORS INDICATED IN OHMS. K = 1000 OHMS.

1. VOLTAGE MEASUREMENTS MADE WITH ELECTRONIC TYPE VOLTMETER.
2. VOLTAGES TAKEN BETWEEN POINTS INDICATED AND CHASSIS.
3. VOLTAGE TOLERANCE ±10%.
4. INPUT VOLTAGE 117V AC
5. NO SIGNAL INPUT

FIGURE 7. SCHEMATIC DIAGRAM