EMERSON RADIO AND PHONO. CORP. MODEL 569, CHASSIS 120062A

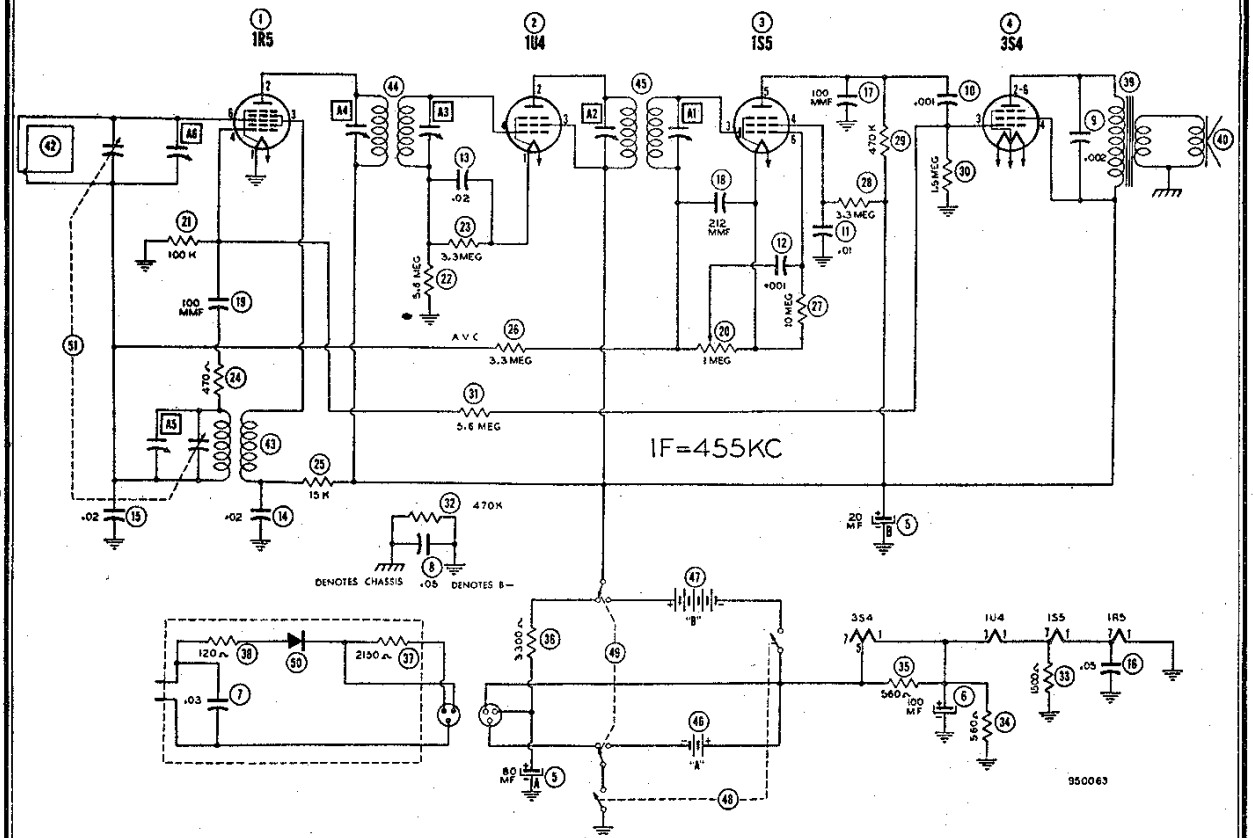

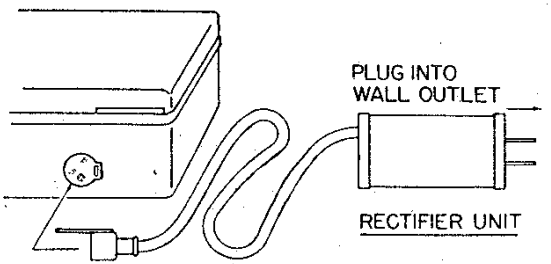

POWER SUPPLY PLUG

PLUG INTO RECEPTACLE IN RECEIVER. INSERT PLUG ALL THE WAY.
FOR BATTERY OPERATION REMOVE PLUG.

BATTERIES USED IN THIS RECEIVER		
TYPE	MANUFACTURER'S NUMBER	
6 Volt "A"	Olin No. 4919	Eveready No. 724
67½ Volt "B"	Olin No. 1712	Eveready No. 457

A.C.-D.C. OPERATION—Insert three-prong plug into socket on side of receiver. Plug Rectifier Unit into 105-125 volt wall outlet. Rectifier Unit will normally operate warm. Keep unit free from dust and in a well ventilated location. *OPERATE RECTIFIER UNIT IN HORIZONTAL POSITION ONLY.* If set is inoperative on D.C., reverse plug in wall outlet.

BATTERY OPERATION — Remove the three-prong plug from the receiver; the self-contained batteries will then supply power. Removal of Rectifier Unit from wall outlet is desirable.

BATTERY REPLACEMENT

TUBE AND BATTERY LOCATIONS

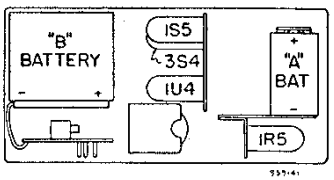

1. Remove power supply plug from set.
2. Slide the button on the release catch near the handle in the direction of the arrow. This loosens the bottom shell and permits it to be swung open on the hinge, making the batteries accessible.
3. Insert the batteries as shown in the diagram.
4. To reassemble, hold the chassis face down with the batteries in place. Close the bottom shell over the chassis and press the handle end of the shell so that it snaps into place.